REVISIONS

REVISION	DATE	DESCRIPTION
1	10/2/20	REVISED PER GMB COMMENTS DATED 9/23/20
2	3/23/21	REVISED PER NEW LAYOUT

DATE

CIVIL ENGINEERING ASSOCIATES, LLC
• ENGINEERING • SURVEYING • CONSTRUCTION SERVICES
55 W. MAIN STREET
MIDDLETOWN, DE 19709
PHONE (302) 376-8833
FAX (302) 376-8834
WWW.CEA-PE.COM

UTILITY PLAN
FOR
HUDSON'S RESERVE
TOWN OF MILLVILLE
SUSSEX COUNTY, DELAWARE

DATE: JULY 6, 2020

DESIGNED BY: RT

APPROVED BY: RHS

FILE: UTILITY_PLAN.DWG

SHEET NO.: U-1

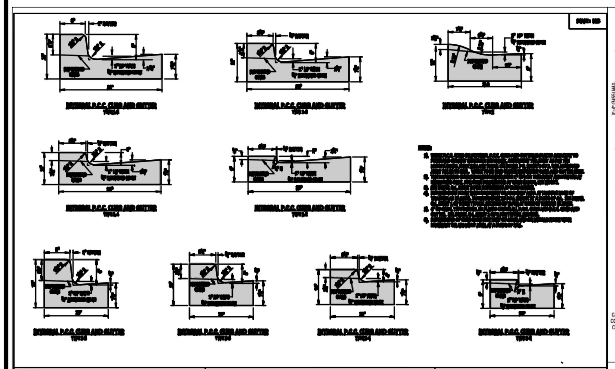

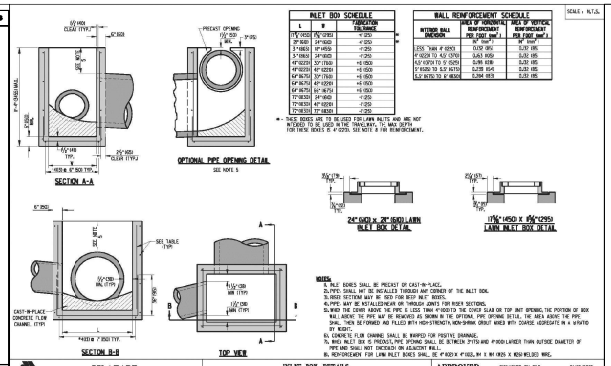

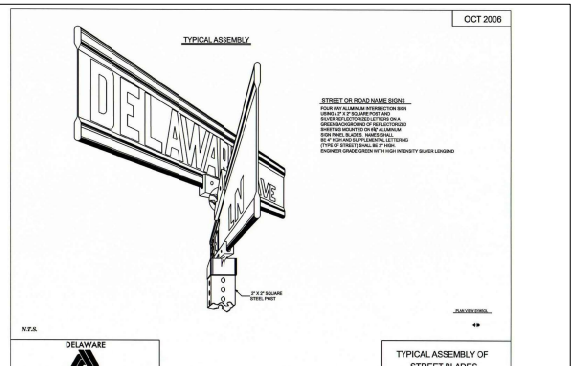

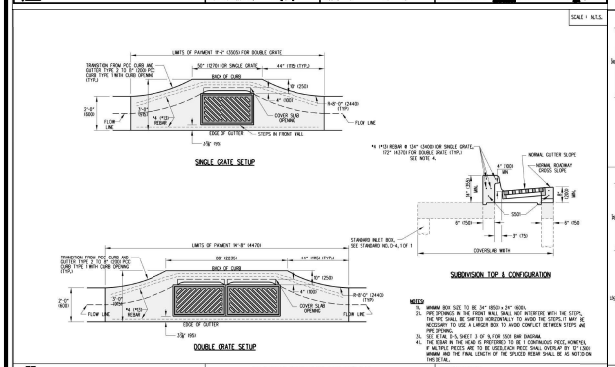

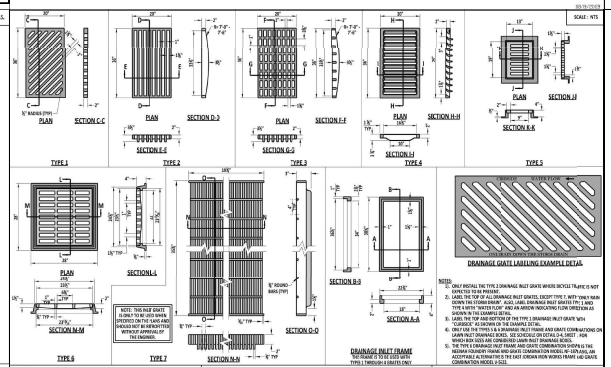

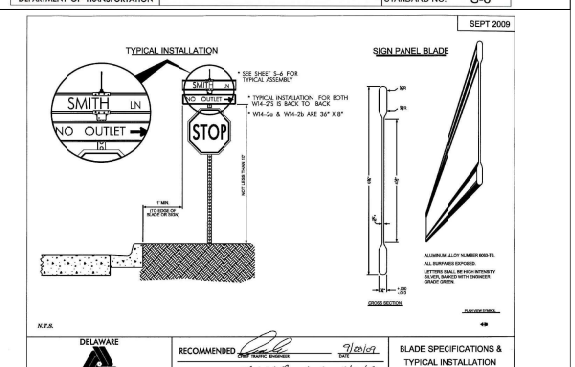

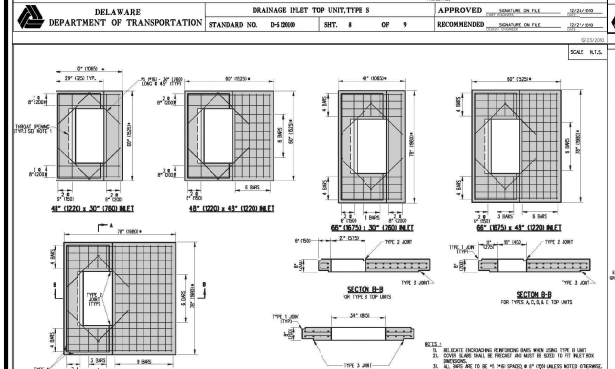

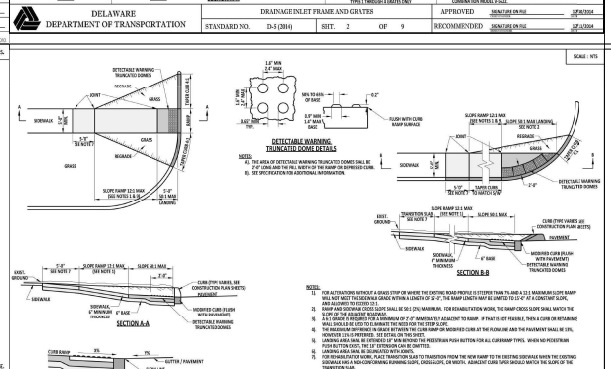

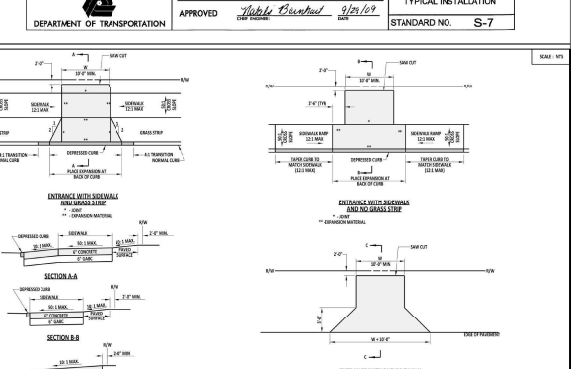

REVISIONS

REVISION	DATE	DESCRIPTION
1	10/2/20	REVISED PER CMS COMMENTS DATED 9/23/20
2	3/23/21	REVISED PER NEW LAYOUT

DATE:

CIVIL ENGINEERING ASSOCIATES, LLC
• ENGINEERING • SURVEYING • CONSTRUCTION SERVICES
55 W. MAIN STREET
MIDDLETOWN, DE 19709
PHONE (302) 376-8833
FAX (302) 376-8834
WWW.CEA-DE.COM

DETAILS (SHEET 1 OF 2)

FOR

HUDSON'S RESERVE

TOWN OF MILLVILLE
SUSSEX COUNTY, DELAWARE

DATE: JULY 6, 2020

DESIGNED BY: RT

APPROVED BY: RHS

FILE: DETAILS.dwg

SHEET NO.: D-1

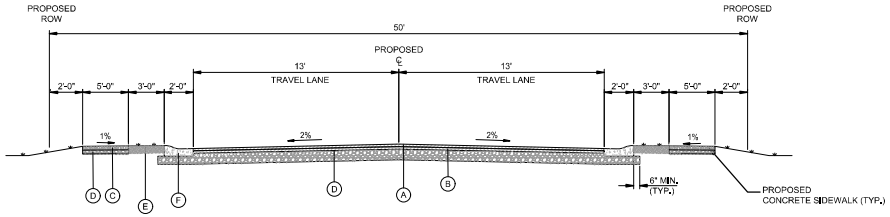

TYPICAL ROAD SECTION

NTS

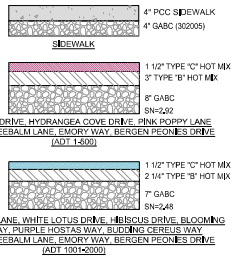

TYPICAL PAVEMENT SECTIONS

LEGEND:

A	ITEM 401651 - SUPERPAVE TYPE C, 160 GYRATION, PG 70-22
B	ITEM 401654 - SUPERPAVE TYPE B, 160 GYRATION, PG 70-22
C	ITEM 705001 - P.C.C. SIDEWALK, 4" DEPTH
D	ITEM 302007 - GRADED AGGREGATE BASE COURSE, TYPE B
E	GRASS STRIP (WIDTH AS NOTED) ITEM 733002 - TOPSOILING, 6" DEPTH ITEM 734013 - PERMANENT GRASS SEEDING, DRY GROUND ITEM - 735006 - MULCHING, STRAW
F	ITEM 701011 - INTEGRAL P.C.C. CURB AND GUTTER, TYPE 2
G	ITEM 715001 - PERFORATED PIPE UNDERDRAINS, 6"

NOTES:

1. THE DEVELOPER IS RESPONSIBLE FOR CORRECTIVE MEASURES ASSOCIATED WITH SLOPES LESS THAN 0.5%. THE TOWN OF MILLVILLE WILL NOT BE RESPONSIBLE FOR ANY CORRECTIVE MEASURES.

2. ALL FILL MATERIAL WITHIN THE PROPOSED RIGHT OF WAY SHALL MEET TYPE F MATERIAL SPECIFICATIONS AS REQUIRED BY DELDOT. MATERIAL SHALL BE PLACED IN SUCCESSIVE LAYERS, AND EACH LAYER SHALL BE PLACED IN A LEVEL, UNIFORM CROSS-SECTION, NOT TO EXCEED 8" IN DEPTH, LOOSE MEASUREMENT, UNLESS OTHERWISE APPROVED BY THE ENGINEER. EACH LAYER SHALL BE PROPERLY COMPACTED, AS HEREINAFER SPECIFIED, BEFORE STARTING THE NEXT LAYER.

3. COMPACTION SHALL CONTINUE UNTIL EACH LAYER IS THOROUGHLY AND UNIFORMLY COMPACTED TO THE FULL WIDTH OF THE EMBANKMENT AND TO 95% OR MORE OF THE MAXIMUM DENSITY OF THE SAME SOILS AS DETERMINED BY AASHTO T99 METHOD C, MODIFIED. THE DETERMINATION OF COMPLIANCE WITH FIELD COMPACTION REQUIREMENTS, AS SPECIFIED HEREIN, SHALL BE IN ACCORDANCE WITH THE FOLLOWING AASHTO TEST METHODS:
   (1) AASHTO T191, T238 AND T239, MODIFIED. FIELD DENSITY TESTS SHALL BE EXPRESSED AS A PERCENTAGE OF THE MAXIMUM DENSITY MADE ON THE SAME SOILS.
   (2) AASHTO T99 METHOD C, MODIFIED, DETERMINATION OF MAXIMUM DENSITY AND OPTIMUM MOISTURE CONTENT.
   (3) AASHTO T224, MODIFIED, BY COARSE PARTICLE CORRECTION METHOD.

4. COMPACTION TESTING SHALL BE PERFORMED BY A QUALIFIED GEOTECHNICAL TESTING FIRM. ALL TESTING SHALL BE COMPLIANCE WITH CURRENT DELDOT REGULATIONS.

PAVEMENT SECTION KEY MAP

SCALE: 1" = 150'

REVISIONS

REVISION	DATE	DESCRIPTION
1	10/2/20	REVISED PER GMB COMMENTS DATED 9/23/20
2	3/23/21	REVISED PER NEW LAYOUT

DATE

CIVIL ENGINEERING ASSOCIATES, LLC
• ENGINEERING • SURVEYING • CONSTRUCTION SERVICES
55 W. MAIN STREET
MIDDLETOWN, DE 19709
PHONE (302) 376-8833
FAX (302) 376-8834
WWW.CEA-DE.COM

DETAILS (SHEET 2 OF 2)

FOR

HUDSON'S RESERVE

TOWN OF MILLVILLE
SUSSEX COUNTY, DELAWARE

DATE: JULY 6, 2020

DESIGNED BY: RT

APPROVED BY: RHS

FILE: DETAILS.dwg

SHEET NO.: **D-2**

REVISIONS

REVISION	DATE	DESCRIPTION
1	10/2/20	REVISED PER GMB COMMENTS DATED 9/23/20
2	3/23/21	REVISED PER NEW LAYOUT

DATE

CIVIL ENGINEERING ASSOCIATES, LLC
• ENGINEERING • SURVEYING • CONSTRUCTION SERVICES
55 W. MAIN STREET
MIDDLETOWN, DE 19709
PHONE (302) 376-8833
FAX (302) 376-8834
WWW.CEA-DE.COM

LANDSCAPE PLAN
FOR
HUDSON'S RESERVE
TOWN OF MILLVILLE
SUSSEX COUNTY, DELAWARE

DATE: JULY 6, 2020

DESIGNED BY: RT

APPROVED BY: RHS

FILE: LANDSCAPE_PLAN.DWG

SHEET NO.: L-1

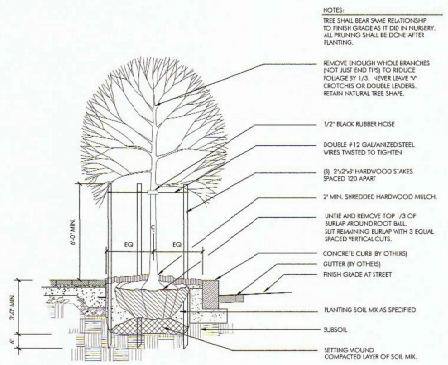

01 STREET TREE PLANTING

SCALE : NTS

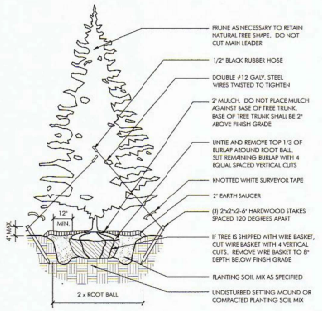

02 EVERGREEN TREE PLANTING

SCALE : NTS

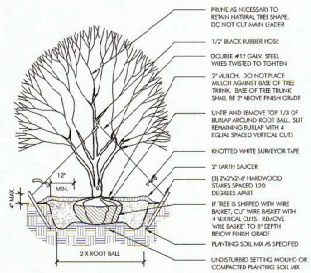

03 MULTISTEM TREE PLANTING

SCALE : NTS

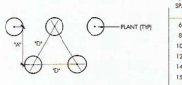

PLANT SPACING "D"	ROW "W"
6" O.C.	5" O.C.
8" O.C.	7" O.C.
10" O.C.	9" O.C.
12" O.C.	10" O.C.
14" O.C.	12" O.C.
15" O.C.	13" O.C.
16" O.C.	14" O.C.
18" O.C.	16" O.C.
24" O.C.	21" O.C.
30" O.C.	26" O.C.
36" O.C.	30" O.C.

NOTE:
GROUND COVERS AND PERINNIALS TO BE INSTALLED WITH TRIANGULAR SPACING

04 PLANT SPACING

SCALE : NTS

HUDSON PROPERTY
Plant Schedule

QTY.	KEY	BOTANICAL NAME	COMMON NAME	SIZE	COND.	COMMENTS
Canopy Trees						
	AR	*Acer rubrum 'Red Sunset'*	Red Sunset Red Maple	2-2 1/2" cal.	B&B	single leader; full branching
	AT	*Asimina triloba*	Pawpaw	2-2 1/2"	B&B	single leader; full branching
	BN	*Betula nigra*	River Birch	2-2 1/2" cal.	B&B	multi-item; matched, full branching
	PA	*Platanus x acerifolia 'Exclamation'*	London Planetree	2-2 1/2" cal.	B&B	single leader; full branching
	QA	*Quercus alba*	White Oak	2-2 1/2" cal.	B&B	single leader; full branching
	QC	*Quercus coccinea*	Scarlet Oak	2-2 1/2" cal.	B&B	single leader; full branching
	QP	*Quercus phellos*	Willow Oak	2-2 1/2" cal.	B&B	single leader; full branching
Evergreen Trees						
	PT	*Pinus taeda*	Loblolly Pine	12-14' ht.	B&B	heavy; matched; symmetrical
	PV	*Pinus virginiana*	Virginia Pine	12-14' ht.	B&B	heavy; matched; symmetrical
Ornamental Trees						
	AM	*Amelanchier canadensis*	Allegheny Serviceberry	8'-10 ht.	B&B	multistem - 3 stems minimum; full branching

Notes:
All materials' specifications shall be in accordance with the industry standard for grading plant material - The American Standard for Nursery Stock (ANSI Z60.1).
Maintenance of all trees and landscape materials shall conform to accepted industry standards set forth by the Landscape Contractors Association, American Society of Landscape Architects, the International Society of Arboriculture, and the American National Standards Institute.

05 PLANTING SCHEDULE

SCALE : NTS

REVISIONS

REVISION	DATE	DESCRIPTION
1	10/2/20	REVISED PER CMB COMMENTS DATED 9/23/20
2	3/23/21	REVISED PER NEW LAYOUT

DATE

CIVIL ENGINEERING ASSOCIATES, LLC
• ENGINEERING • SURVEYING • CONSTRUCTION SERVICES
55 W. MAIN STREET
MIDDLETOWN, DE 19709
PHONE (302) 376-8833
FAX (302) 376-8834
WWW.CEA-DE.COM

LANDSCAPE PLAN
FOR
HUDSON'S RESERVE
TOWN OF MILLVILLE
SUSSEX COUNTY, DELAWARE

DATE: JULY 6, 2020

DESIGNED BY: RT
APPROVED BY: RHS

FILE: LANDSCAPE_PLAN.DWG

SHEET NO.: L-2